Rina Dechter, Spring-2018
Assigned: April 4
Due: April 18

COMPSCI 276: Reasoning with Graphical Models, Problem Set 1

The homework is based on chapter 1-3 in the Dbook. Note: Some of the questions use concepts that we will cover only in the coming lecture (e.g., arc-consistency and min-induced-width ordering).

1. (5, extra credit) Read chapter 1-3 and give feedback (is it clear? typos?)
2. (10 pts) Let $R_1 = \{(a,b),(c,d),(d,e)\}$ and $R_2 = \{(b,c),(e,a),(b,d)\}$.
   (a) Compute $R_1 \cup R_2$,
   (b) Compute $R_1 - R_2$,
   (c) Assume the scope of R_1 is $\{x,y\}$ and the scope of R_2 is $\{y,z\}$ compute:
      i. $R_{xy} \bowtie R_{yz}$,
      ii. $\pi_x R_{xy}$
      iii. $\sigma_{x=c}(R_{xy} \bowtie R_{yz})$,
3. (20 pts)Formulate the Zebra Problem below as a constraint network. Provide the variables, domains and constraints. Draw its primal constraint graph.

   The Zebra Problem: There are five houses in a row, each of a different color, inhabited by women of different nationalities. The owner of each house owns a different pet, serves different drinks, and smokes different cigarettes from the other owners. The following facts are also known:

   The Englishwoman lives in the red house
   The Spaniard owns a dog
   Coffee is drunk in the green house
   The Ukrainian drinks tea
   The green house is immediately to the right of the ivory house
   The Old gold smoker owns the snail
   Kools are smoked in the yellow house
   Milk is drunk in the middle house
   The Norwegian lives in the first house on the left
   The Chesterfield smoker lives next to the fox owner
   The yellow house is next to the horse owner
   The Lucky Strike smoker drinks orange juice
   The Japanese smokes Parliament
   The Norwegian lives next to the blue house

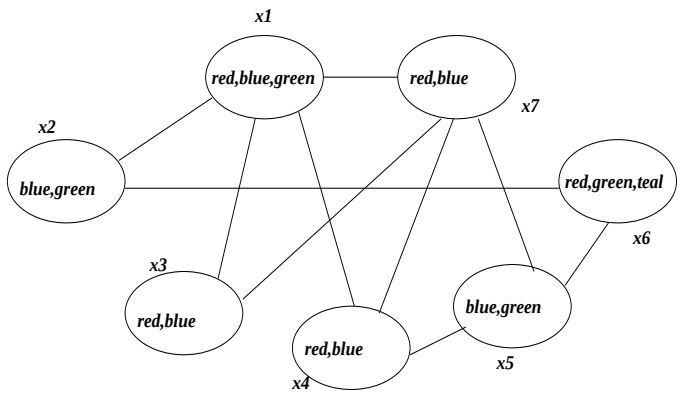

Figure 1: A graph coloring problem.

The Question: who drinks water and who owns the zebra?

4. (20 pts, A crypto-arithmetic problem). Provide two formulations for each of the Cryptarithmetic problems below as a constraint network. Provide the variables, domains and constraints. Draw the primal and the dual constraint graphs. Discuss which formulation is superior, in your opinion.

(a)
$$\begin{array}{cccccc} & & S & E & N & D \\ + & & M & O & R & E \\ \hline & M & O & N & E & Y \end{array}$$

5. (20 pts) Consider the modified coloring problem in Figure 1. The constraints are not equal constraints, and the domains are indicated inside the nodes in the graph.

   (a) Apply addaptive-consistency to the problem to yield a backtrack-free problem.

   (b) Find a solution to the problem.

6. (20 pts) Consider the following constraint network (node i refer to variable X_i).

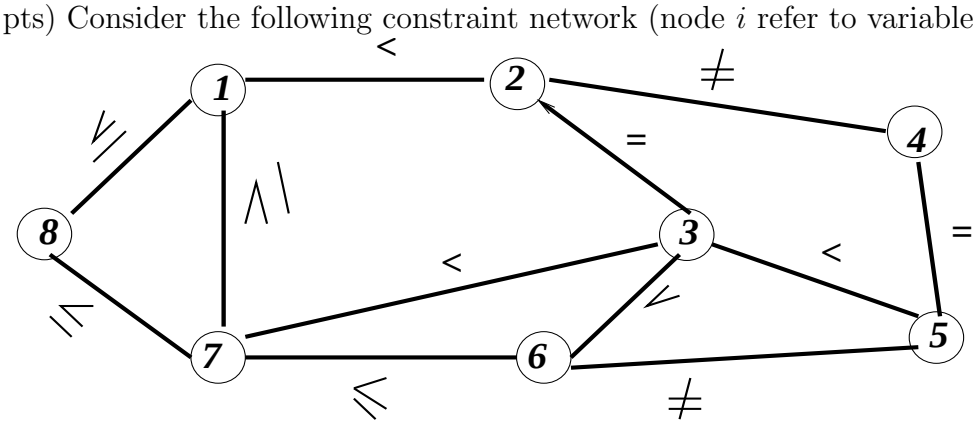

Assume that each variable has a domain of $\{1, 2, 3, 4\}$. Find an equivalent arc consistent network.

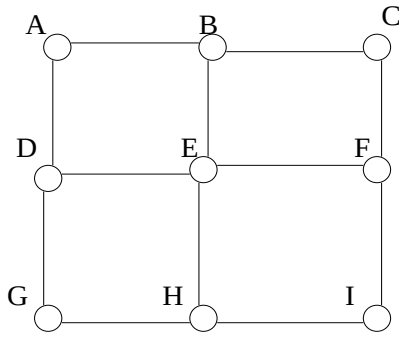

Figure 2: Grid with nine nodes

7. (optional) Prove that an arc-consistent binary network having no cycles and whose domains are not empty has a solution.

8. (30 pts) Consider the crossword puzzle:

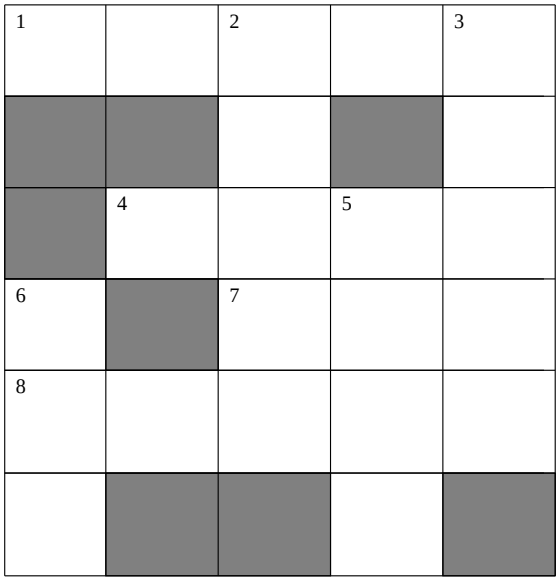

Word List

aft	laser
ale	lee
eel	line
heel	sails
hike	sheet
hoses	steer
keel	tie
knot	

(a) (10) Model the problem as a binary csp, that is, where the words are the variables (the problem has 8 variables). Draw its constraint graph.

(b) (10) Generate a min-induced-width ordering of the constraint graph. Generate the induced graph along these orderings. What is the induced-width of this problem?

(c) (10) Using the min-induced-width ordering, show the constraints which will be recorded for this specific problem by adaptive-consistency

9. Consider the graph in Figure 2.

(a) (10) What is the induced-width of the graph? Provide an ordering having minimum induced-width.

(b) (10) Assume that the graph expresses a binary constraint network with some constraints (e.g., inequalities). Provide a complexity bound using the induced-width for applying algorithm adaptive-consistency along the optimal induced-width ordering of this problem.