AAS 86-035

AMERICAN ASTRONAUTICAL SOCIETY

Automated Diagnosis of Attitude Control Anomalies

Michael J. Pazzani and Anne F. Brindle
The Aerospace Corporation
P.O.Box 92957
Los Angeles, CA 90009

ANNUAL AAS GUIDANCE AND CONTROL CONFERENCE

February 1-5, 1986
Keystone, Colorado

Sponsored by
ROCKY MOUNTAIN SECTION
AMERICAN ASTRONAUTICAL SOCIETY

AAS PUBLICATIONS OFFICE, P. O. BOX 28130 - SAN DIEGO, CALIFORNIA 92128

AUTOMATED DIAGNOSIS OF ATTITUDE CONTROL ANOMALIES

Michael J. Pazzani and Anne F. Brindle
The Aerospace Corporation
P.O.Box 92957
Los Angeles, CA 90009

This paper discusses the design of an expert system for the diagnosis of satellite anomalies. The purpose of developing this expert system was to demonstrate the feasibility of applying artificial intelligence techniques to satellite control. The particular problem discussed in this paper is the diagnosis of problems with the momentum wheels of the DSCS-III satellite.

INTRODUCTION

This paper describes a project at The Aerospace Corporation to design and implement an expert system to diagnose satellite anomalies. We have focused on the attitude control system of the DSCS-III satellite. Attitude control was selected because the majority of anomalies which seriously impact the satellite mission occur within the attitude control system. DSCS-III was chosen because The Aerospace Corporation possesses a simulator for the DSCS-III attitude control system which is used to generate telemetry tapes reflecting faulty behaviors to aid the engineers who diagnose anomalies. These telemetry tapes also serve as input to our expert system.

There are two different approaches that have been used for fault diagnosis. In one approach, the actual behavior of the components of a system are compared to the predicted behavior[1, 2, 3]. The predicted behavior of a device is specified by a quantitative or qualitative model of the device. For a large system with many rapidly changing values, such as a satellite, this comparison can be inefficient. The alternative to using device models is to use heuristic rules which encode empirical associations between unusual behavior and faulty components[4, 5, 6]. This can require a great deal of debugging of the knowledge base to identify the very precise conditions which indicate a particular fault is present. In the Attitude Control Expert System (ACES) described in this paper, we have integrated these two approaches: heuristic rules are used to hypothesize potential faults and device models are used to confirm or deny hypothesized faults.

ACES: THE ATTITUDE CONTROL EXPERT SYSTEM

The input to ACES is a tape of telemetry data which indicates the readings of various sensors and devices in the attitude control system of DSCS-III. ACES analyzes the telemetry data, indicates what device, if any, is faulty and suggests a corrective action (e.g., switching to a backup component). ACES consists of three major modules:

1. Detector. This module processes telemetry data to identify telemetry signals with unusual conditions. A set of frames describes the normal range of values.[7] The detector converts the raw telemetry data to a set of features which describe the atypical aspects of the telemetry.

2. Diagnostician. The diagnostician module finds an explanation for the atypical features. Typically, the explanation consists of a single fault in a component of the attitude control system.

3. Action. Heuristic rules may recommend a corrective action which enables the satellite to recover from the fault.

In this paper, we focus on the diagnostician of ACES. The diagnostician is comprised of several cooperating modules.

1. Fault Identification. The features extracted from the telemetry data stream are used as symptoms of particular faults. This step postulates a fault which could account for the behavior of the satellite as reflected by the atypical features of the telemetry data. Heuristic rules are used to postulate potential faults.

2. Fault Confirmation. Once a fault has been postulated, other corroborating evidence is checked to confirm that the particular problem identified by the fault identification rules is consistent with the state of the satellite. This process either can confirm that the fault is present, or can deny that the postulated fault is present, in which case an attempt is made to identify another potential fault. This step compares the actual behavior of a component to the behavior predicted by applying its observed inputs to a mathematical model of its function.

3. Fault Implication Analysis. After a fault has been confirmed, the expected effects of the fault on the values of other telemetry data are assessed. A model of the attitude control system is used to predict values of telemetry which might be affected by the fault. The predicted telemetry values are analyzed by the detector to see if any of the predicted values are unusual. Descriptions of unusual predicted values are then compared against the set of unusual features extracted to explain any unusual features which are a result of a confirmed fault. Those extracted features which match predicted features are marked as not requiring

further fault identification.

AN EXAMPLE DIAGNOSIS

This section contains an example of ACES diagnosing a fault. To understand the logic followed by ACES, it is necessary to know something about the attitude control system of DSCS-III. The attitude control system of DSCS-III consists of a number of sensors which calculate the satellite's orientation on the three axes (yaw, pitch and roll) by detecting the location of the earth and the sun and a set of reaction wheels which can change the satellite orientation if it deviates from the desired orientation due to torques such as solar pressure. There are four reaction wheels (PY+, PY-, PR+, and PR-), arranged on the four sides of a pyramid (see Figure 1) . The PY+ and PY- wheels spin in opposite directions as do the PR+ and PR- wheels. The attitude control system issues a wheel drive signal to each reaction wheel which can adjust its speed to correct for changes of orientation on a particular axis by changing the momentum of the satellite on that the axis. Pitch momentum is stored as the sum of all four wheel speeds; roll momentum is stored as the difference between the PR+ and PR- speeds; and yaw momentum is stored as the difference between the PY+ and PY- speeds. Since there are four reaction wheels each contributing to momentum on two of three axes, the satellite can survive the failure of any one wheel.

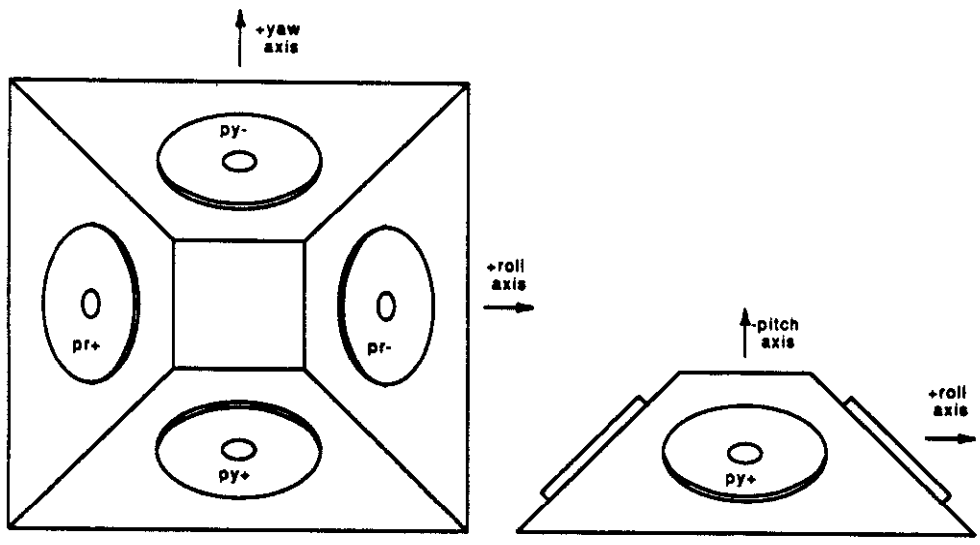

Figure 1: The reaction wheels of DSCS-III

A diagram of a portion of the attitude control system appears in Figure 2. The attitude control system monitors the attitude of the satellite

and attempts to correct for any deviation from the desired attitude. The signal YATT represents the attitude on the yaw axis, RATT represents the attitude on the roll axis and PATT represents the attitude on the pitch axis. The wheel drive signal processing component issues drive signals to the motor of the reaction wheels to change the wheel speeds to correct for any deviations from the desired attitude. The wheel drive signals are WDPY+, WDPY-, WDPR+ and WDPR- for the PY+, PY-, PR+ and PR- wheels respectively. The wheel speeds are measured by tachometers yielding the signals WSPY+, WSPY-, WSPR+ and WSPR- for the PY+, PY-, PR+ and PR- wheels respectively. The tachometer signal processing module converts the four wheel speeds to the three values called momentum equivalent rates (YMER, RMER, and PMER) representing the equivalent wheel speeds on the yaw, roll, and pitch axes respectively. These equivalent wheel speeds are also combined with the attitude information from the sensors (YCTL, RCTL, and PCTL for the yaw, pitch and roll axes) to yield the estimated attitudes (YATT, RATT, and PATT). Using the wheel speed information as an estimate of attitude allows finer control over the attitude. However, a failure of a tachometer can be catastrophic since the attitude estimate from the sensor and the speed will be drastically different.

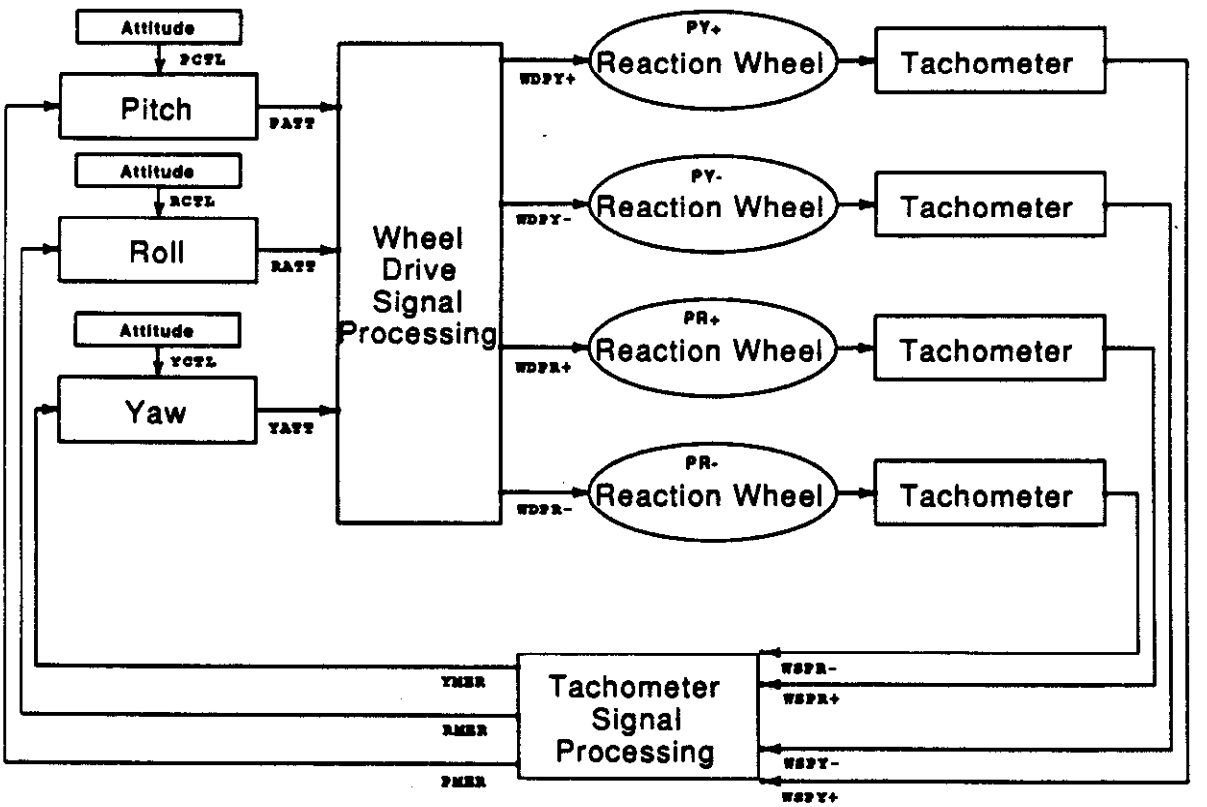

Figure 2: Block diagram of the DSCS-III attitude control system

```
If the speed of ?Wheel
        at ?Time is 0, and
the rate of change of ?Wheel
        before ?Time is equal to
        the friction constant of ?Wheel
Then ?Wheel is ignoring
        the drive signal of ?Wheel.
```

Figure 3: A Fault Identification Rule

$$
\begin{aligned}
&\mathrm{Speed}(\mathrm{Wheel},\ \mathrm{Time}_1) = \\
&\quad \mathrm{Speed}(\mathrm{Wheel}, \mathrm{Time}_0) \\
&\quad + \mathrm{Sum}(\mathrm{Drive}(\mathrm{Wheel}), \mathrm{Time}_0, \mathrm{Time}_1) \\
&\quad - \mathrm{Sum}(\mathrm{Friction}(\mathrm{Wheel}), \mathrm{Time}_0, \mathrm{Time}_1)
\end{aligned}
$$

Figure 4: A Device Model of a Reaction Wheel

To return to the example diagnosis, first the detector notices five atypical features in the telemetry. The reaction wheel PR+ has a speed of 0 after 1:01 (hour:minute) and the speed of each of the four reaction wheels changed an unusually large amount between 0:59 and 1:01. The diagnostician now runs on this data. The fault identification rule in Figure 3 postulates that the failure is due to a broken wheel drive for the PR+ wheel since the wheel slowed down to 0 at the rate of change that friction would cause. Next, the device module for a reaction wheel in Figure 4 is used to confirm this hypothesis. The wheel speed of the PR+ (WSPR+) at 1:01 could be predicted from the speed at 0:59 and the wheel drive (WDPR+) between 0:59 and 1:01. Since WDPR+ is negative in this area (see Figure 5), WSPR+ would be expected to decrease. Since WSPR+ is increasing toward 0, the hypothesis that it is ignoring its drive signal is confirmed.

After the fault has been identified and confirmed the implications of the fault are assessed by consulting a model of the attitude control system. To maintain roll momentum, the difference between WSPR+ and WSPR- should remain the same before and after the fault. Therefore, WSPR- should increase by the same amount as WSPR+. To maintain pitch momentum, the sum of all four wheel speeds should be unchanged, and to maintain yaw momentum the difference between WSPY+ and WSPY- should be unchanged. Therefore, WSPY+ and WSPY- should decrease by the same amount that WSPR+ increased. These predictions explain all of the other atypical features of the telemetry data. Since this fault is handled automatically on board by adjusting the wheel speeds of the three remaining reaction wheels, there is no corrective action.

The power of confirming heuristic fault identification rules with device models is more apparent when the device model denies the hypothesized fault. For example, in Figure 6, there are two wheel speeds which reach 0 at the rate of friction. The fault identification rule in Figure 3

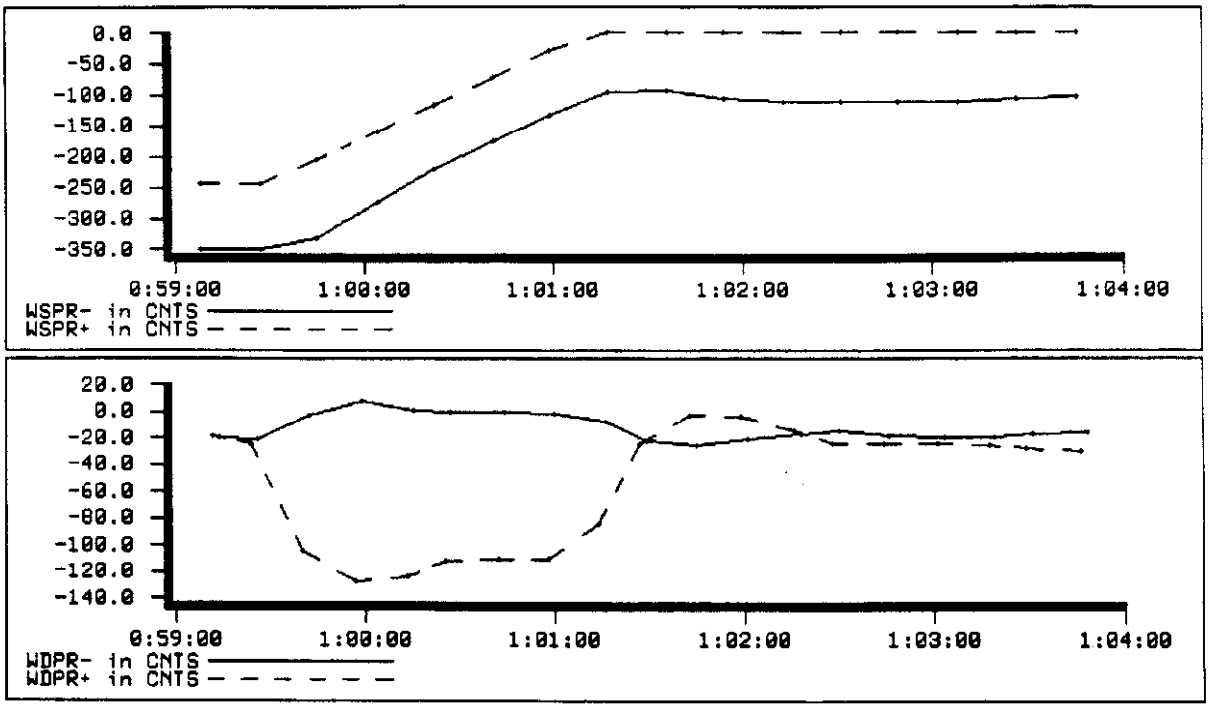

Figure 5: Graphs of the Pitch Roll Wheel Speeds (upper) and Pitch Roll Wheel Drives (lower).

could implicate either the PR+ or the PR- wheel. However, the reaction wheel model indicates that the PR+ wheel is faulty since its speed is increasing but its drive signal shows that its speed should be decreasing. The PR- wheel is responding properly to its wheel drive. The PR- wheel looks faulty because the satellite is in a fairly unusual situation: it is storing no roll momentum (since before the fault the speed of PR+ and PR- are equal). When the PR+ wheel breaks, the PR- wheel also goes to 0.

CONCLUSION

ACES is a prototype expert system which integrates heuristic rules and device models to diagnose anomalies in the DSCS-III attitude control system. In its current status, it can correctly identify any problem with the reaction wheels which the DSCS-III attitude control simulator can simulate. It currently contains approximately 50 rules and device models for the reaction wheels and the attitude control system.

Our future plans include extending the system to handle faults in other areas of the satellite. In addition, we plan to extend the system to operate in real time. Currently, the detection of atypical features is completed before the diagnostician operates. We have constructed a set

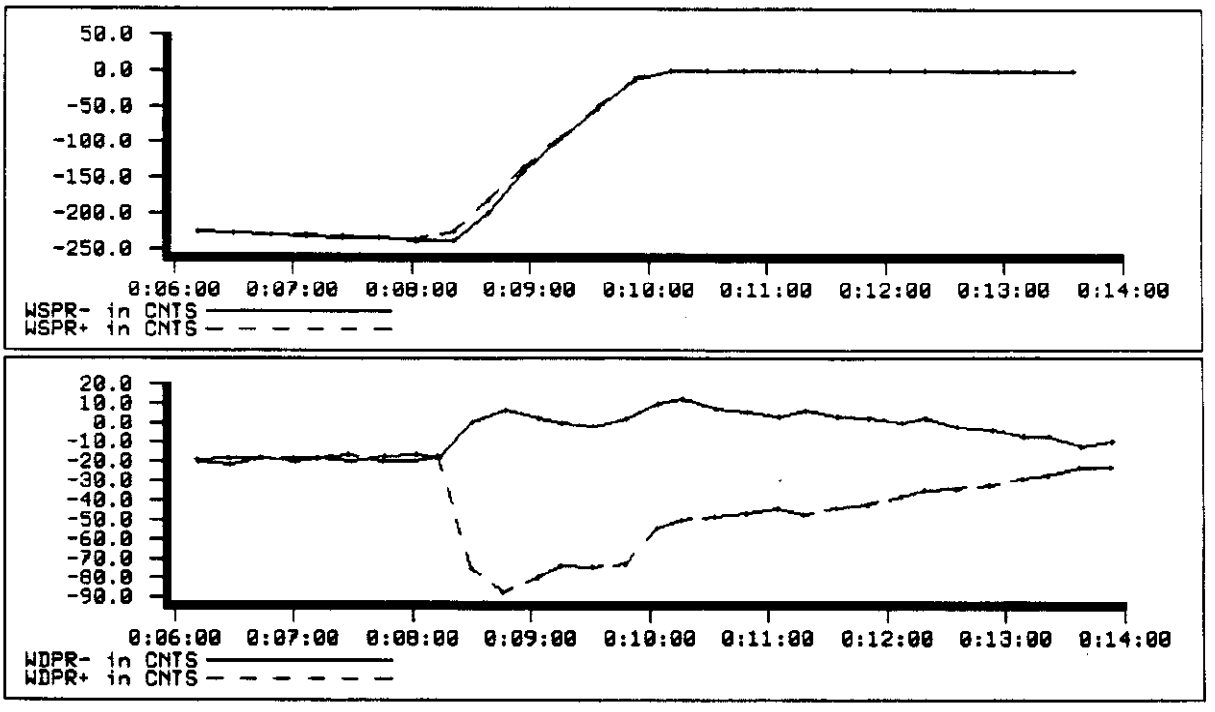

Figure 6: The PR+ wheel is ignoring its wheel drive signal

of detectors for each telemetry signal which could be run in parallel. We anticipate revising the diagnostician so that it could post hypotheses on an agenda to be confirmed or denied after more data becomes available from the detectors.

REFERENCES

1. Davis, R., Shrobe, H., et al., "Diagnosis Based on Description of Structure and Function", Proceedings of the National Conference on Artificial Intelligence, American Association for Artificial Intelligence, Pittsburgh, PA, 1982.

2. Genesereth, M., Bennett, J.S., Hollander, C.R., "DART: Expert Systems for Automated Computer Fault Diagnosis", Proceedings of the Annual Conference, Association for Computing Machinery, Baltimore, MD., 1981.

3. Scarl, E.A., Jamieson, J., & Delaune, C., "A Fault Detection and Isolation Method Applied to Liquid Oxygen Loading for the Space Shuttle", Proceedings of the Ninth International Joint Conference on Artificial Intelligence, Los Angeles, CA, 1985.

4. Shortliffe, E.H., Computer-based Medical Consultation: MYCIN, American Elsevier, New York, NY, 1976.

5. Nelson, W.R., "REACTOR: An Expert System for Diagnosis and Treatment of Nuclear Reactor Accidents", Proceedings of the National Conference on Artificial Intelligence, American Association for Artificial Intelligence,

Pittsburgh, PA, 1982.

6. Wagner, R.E., "Expert System for Spacecraft Command and Control", Computers in Aerospace IV Conference, American Institute of Aeronautics and Astronautics, Hartford, CT, 1983.

7. Minsky, M., "A Framework for Representing Knowledge", in The Psychology of Computer Vision, Winston, P.H., ed., McGraw-Hill, New York, NY, 1975.