More About Turing Machines

"Programming Tricks"

Restrictions

Extensions

Closure Properties

Overview

- At first, the TM doesn't look very powerful.
  - Can it really do anything a computer can?
- We'll discuss "programming tricks" to convince you that it can simulate a real computer.

Programming Trick: Multiple Tracks

- Think of tape symbols as vectors with k components.
- Makes the tape appear to have k tracks.
- Let input symbols be blank in all but one track.
- Thus, a multi-track TM is the same as a single-track (single-tape) TM

Picture of Multiple Tracks

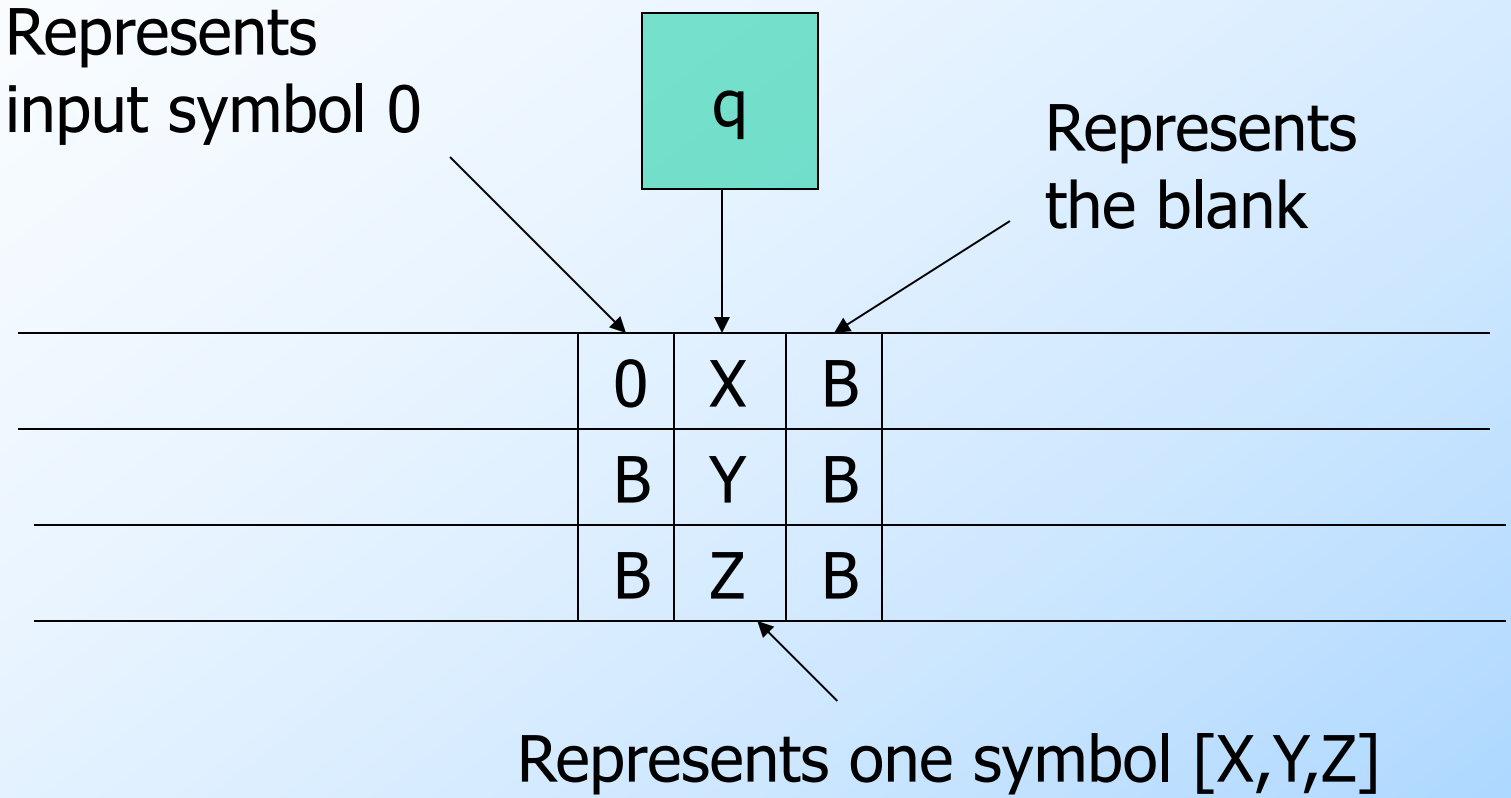

Multi-track Programming Trick 1: Marking

- A common use for an extra track is to *mark* certain positions.
- Almost all cells hold B (blank) in this track, but several hold special symbols (marks) that allow the TM to find particular places on the tape.

Multi-track Programming Trick 2: Semi-infinite Tape

- Consider a version of a TM that never moves left from the initial position.
- Let this position be 0; positions to the right are 1, 2, … and positions to the left are –1, –2, …
- New TM has two tracks.
  - Top holds positions 0, 1, 2, …
  - Bottom holds a marker, positions –1, –2, …

Simulating Infinite Tape by Semi-infinite Tape

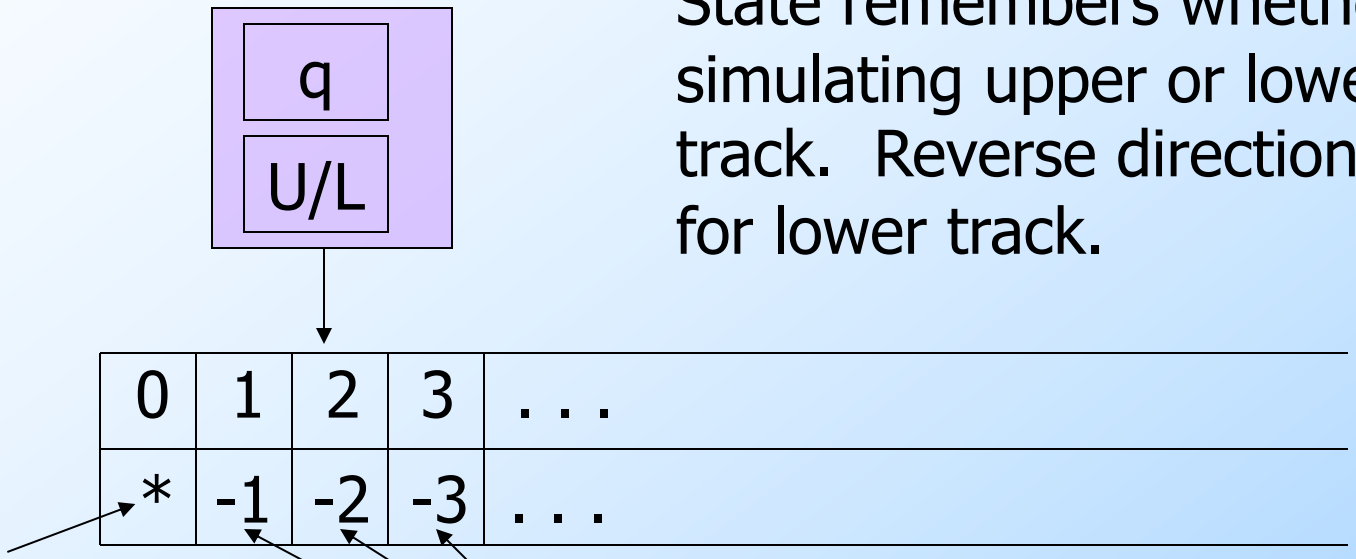

State remembers whether simulating upper or lower track. Reverse directions for lower track.

Put * here at the first move

You don't need to do anything, because these are initially B.

Multitape Turing Machines

- Allow a TM to have k tapes (each with its own head) for any fixed k.
- Move of the TM depends on the state and the symbols under the head for each tape.
- In one move, the TM can change state, write symbols under each head, and move each head independently.

Simulating k Tapes by One

- Use 2k tracks.
- Each tape of the k-tape machine is represented by a track.
- The head position for each track is represented by a mark on an additional track.

Picture of Multitape Simulation

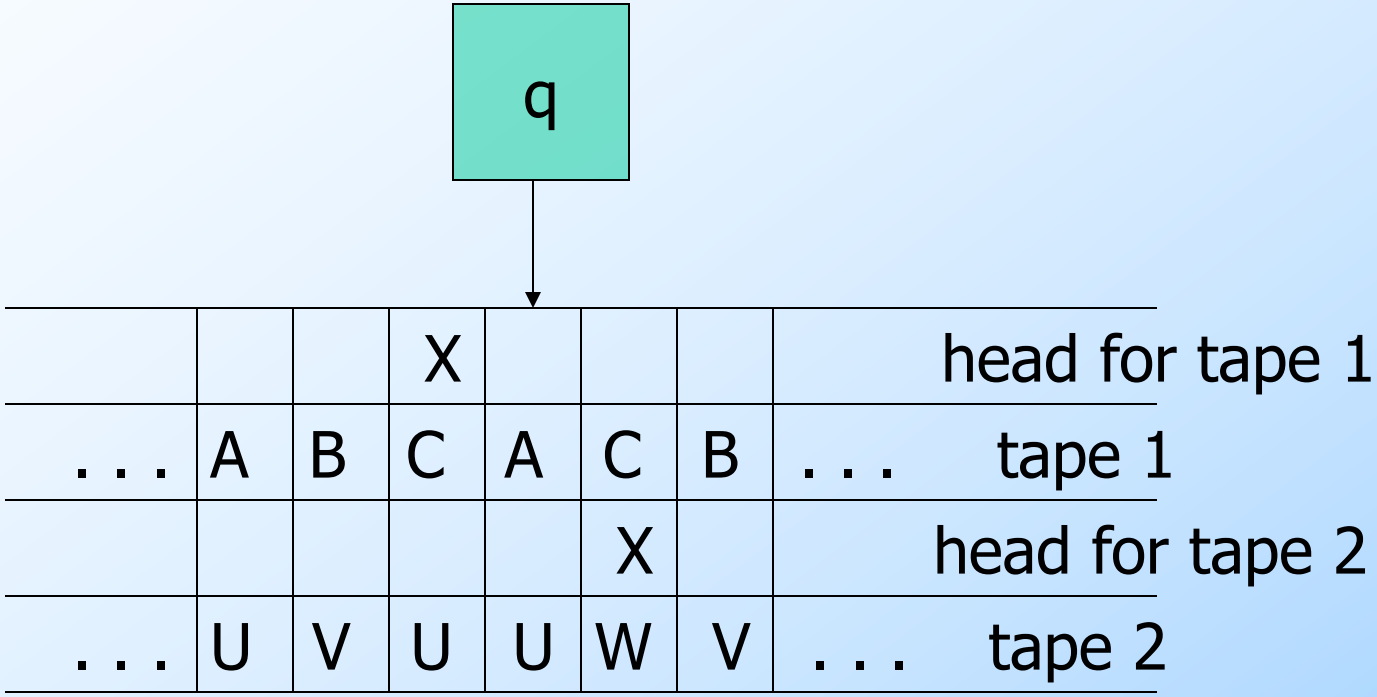

Nondeterministic TM's

- Allow the TM to have a choice of move at each step.
  - Each choice is a state-symbol-direction triple, as for the deterministic TM.
- The TM accepts its input if **any** sequence of choices leads to an accepting state.

Simulating a NTM by a DTM

- The DTM maintains on its tape a queue of ID's of the NTM.
- A second track is used to mark certain positions:
  1. A mark for the ID at the head of the queue.
  2. A mark to help copy the ID at the head and make a one-move change.

Picture of the DTM Tape

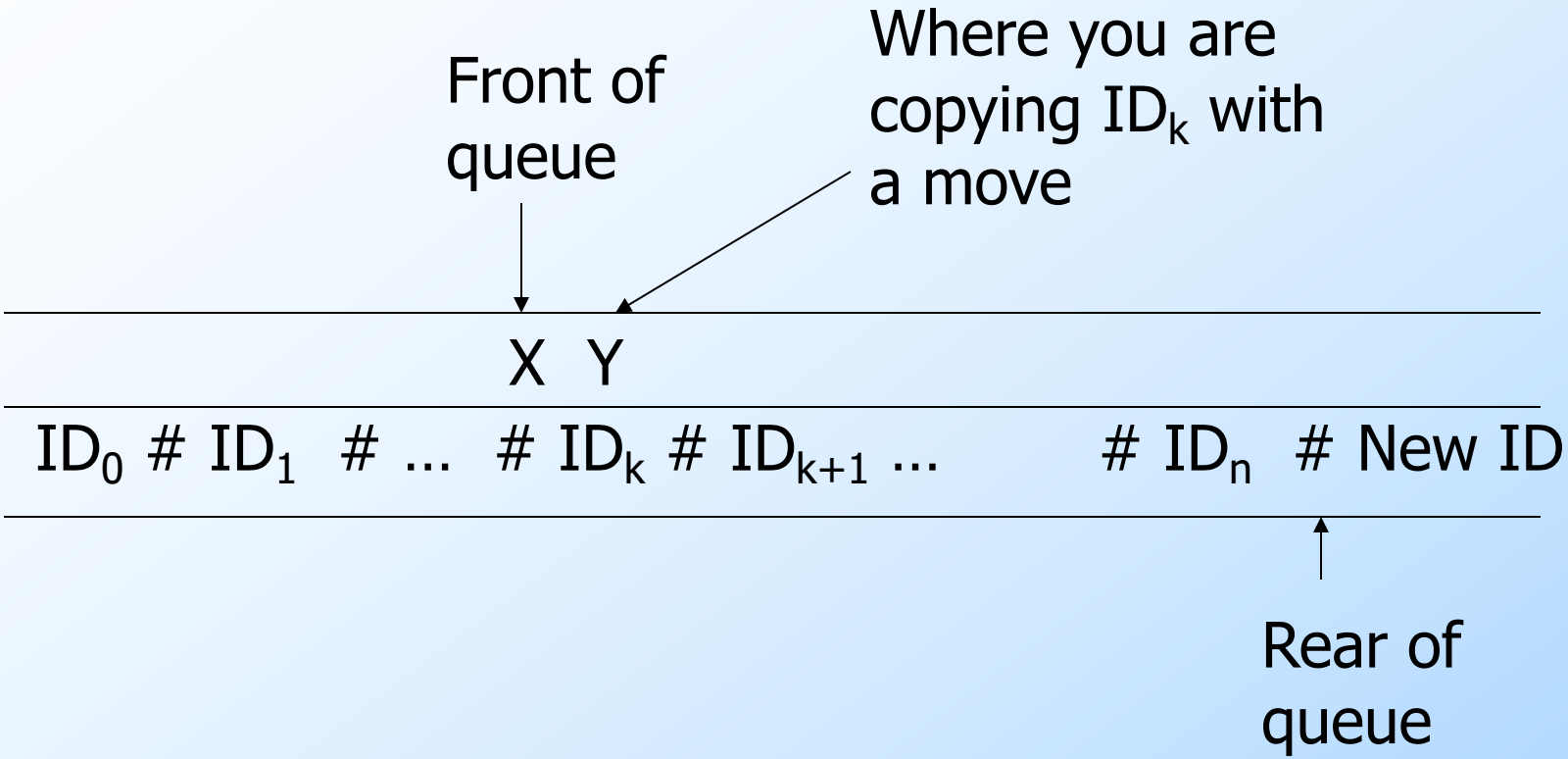

Operation of the Simulating DTM

- The DTM finds the ID at the current front of the queue.
- It looks for the state in that ID so it can determine the moves permitted from that ID.
- If there are m possible moves, it creates m new ID's, one for each move, at the rear of the queue.

Operation of the DTM – (2)

- The m new ID's are created one at a time.
- After all are created, the marker for the front of the queue is moved one ID toward the rear of the queue.
- However, if a created ID has an accepting state, the DTM instead accepts and halts.

Why the NTM -> DTM Construction Works

- There is an upper bound, say k, on the number of choices of move of the NTM for any state/symbol combination.
- Thus, any ID reachable from the initial ID by n moves of the NTM will be constructed by the DTM after constructing at most $(k^{n+1}-k)/(k-1)$ID's.

Sum of $k+k^2+\ldots+k^n$

Why? – (2)

- If the NTM accepts, it does so in some sequence of n choices of move.
- Thus the ID with an accepting state will be constructed by the DTM in some large number of its own moves.
- If the NTM does not accept, there is no way for the DTM to accept.

Taking Advantage of Extensions

- When we discuss construction of particular TM's that take other TM's as input, we can assume the input TM is as simple as possible.
  - E.g., one, semi-infinite tape, deterministic.
- But the simulating TM can have many tapes, be nondeterministic, etc.

Real Computers

- A real computer is often modeled as a Random Access Machine (RAM), where memory is an address space indexed with integer addresses.
- Imagine a computer with a store for an unbounded number of key-value pairs.
  - Generalizes an address space.

Simulating a Name-Value Store by a TM

- The TM uses one of several tapes to hold an arbitrarily large sequence of key-value pairs in the format #key*value#…
- Mark, using a second track, the left end of the sequence.
- A second tape can hold a key whose value we want to look up.

Lookup

- Starting at the left end of the store, compare the lookup key with each key in the store.
- When we find a match, take what follows between the * and the next # as the value.

Insertion

- Suppose we want to insert key-value pair (k, v), or replace the current value associated with key k by v.
- Perform lookup for key k.
- If not found, add k*v# at the end of the store.

Insertion – (2)

- If we find #k*v′#, we need to replace v′ by v.
- If v is shorter than v′, you can leave blanks to fill out the replacement.
- But if v is longer than v′, you need to make room.

Insertion – (3)

- Use a third tape to copy everything from the first tape at or to the right of v′.
- Mark the position of the * to the left of v′ before you do.
- Copy from the third tape to the first, leaving enough room for v.
- Write v where v′ was.

Closure Properties of Recursive and RE Languages

- Both closed under union, concatenation, star, reversal, intersection, inverse homomorphism.
- Recursive closed under difference, complementation.

Union

- Let $L_1 = L(M_1)$ and $L_2 = L(M_2)$.
- Assume M_1 and M_2 are single-semi-infinite-tape TM's.
- Construct 2-tape TM M to copy its input onto the second tape and simulate the two TM's M_1 and M_2 each on one of the two tapes, "in parallel."

Union – (2)

- Recursive languages: If M_1 and M_2 are both algorithms, then M will always halt in both simulations.
- Accept if either accepts.
- RE languages: accept if either accepts, but you may find both TM's run forever without halting or accepting.

Picture of Union/Recursive

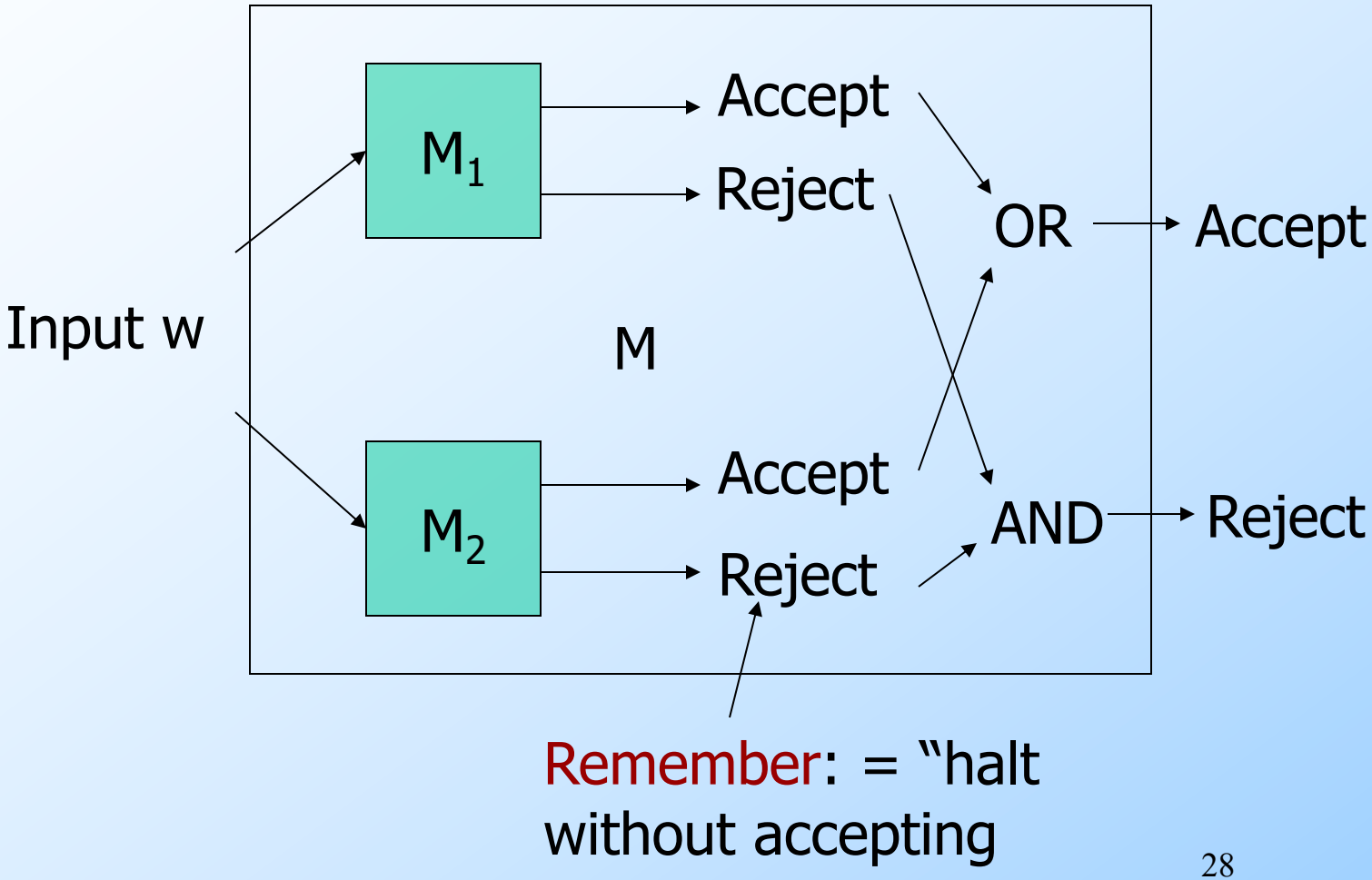

Picture of Union/RE

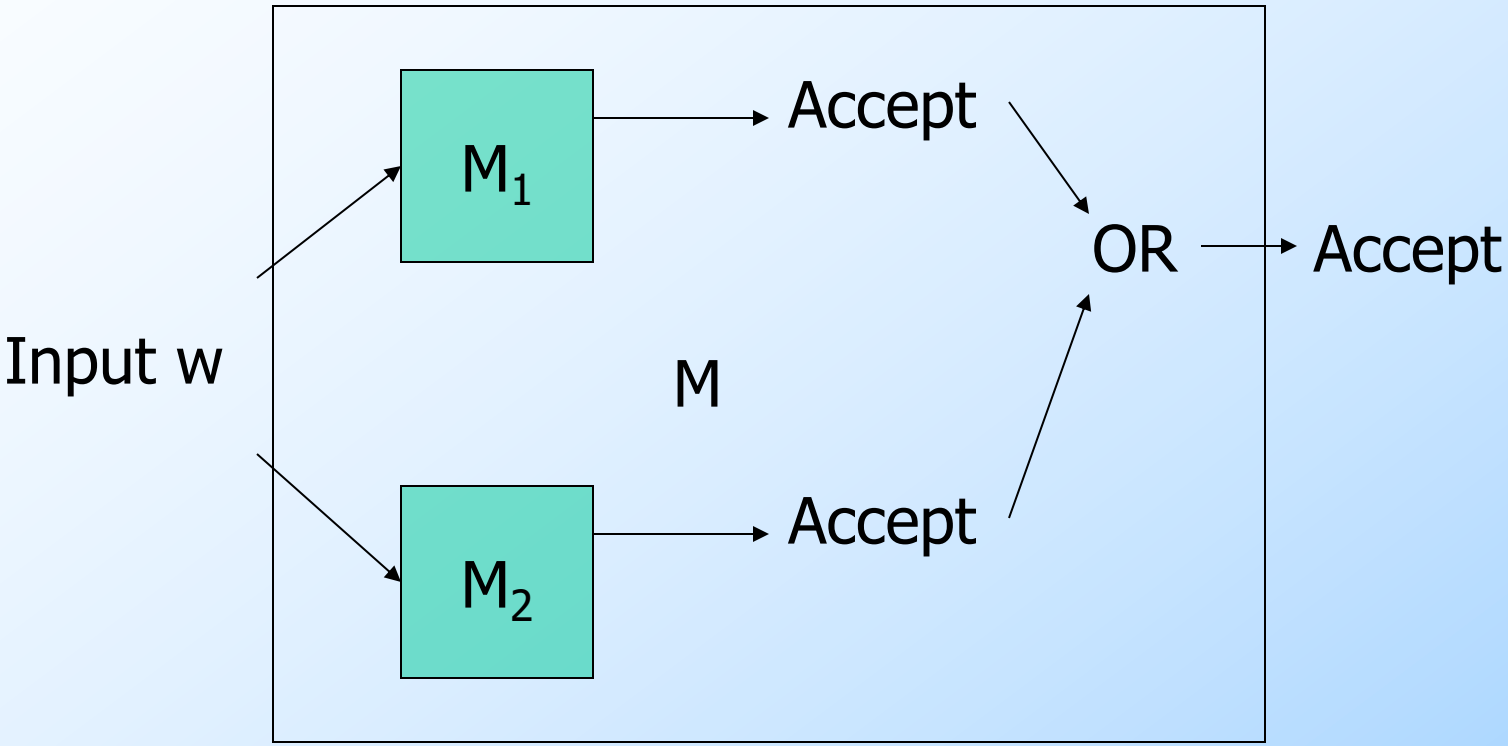

Intersection/Recursive – Same Idea

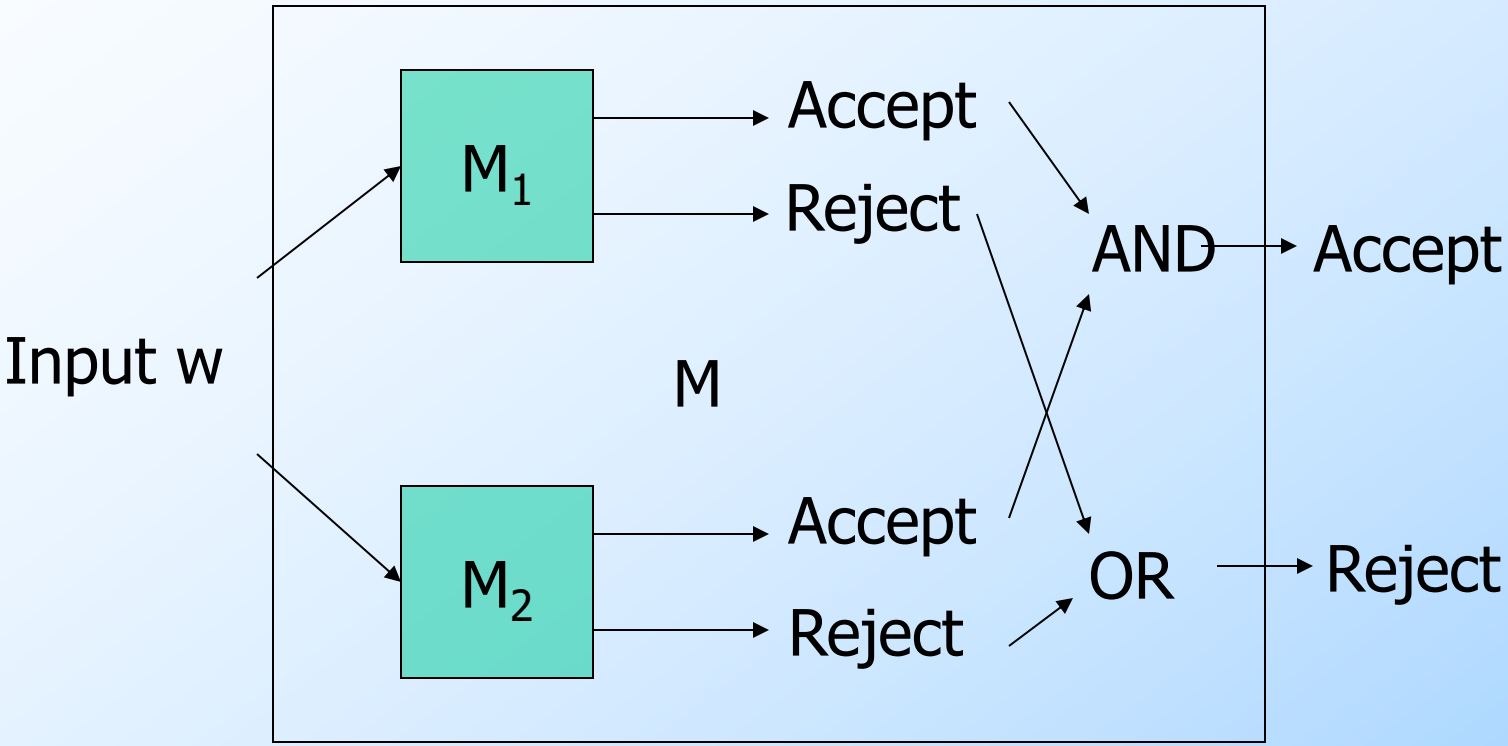

Intersection/RE

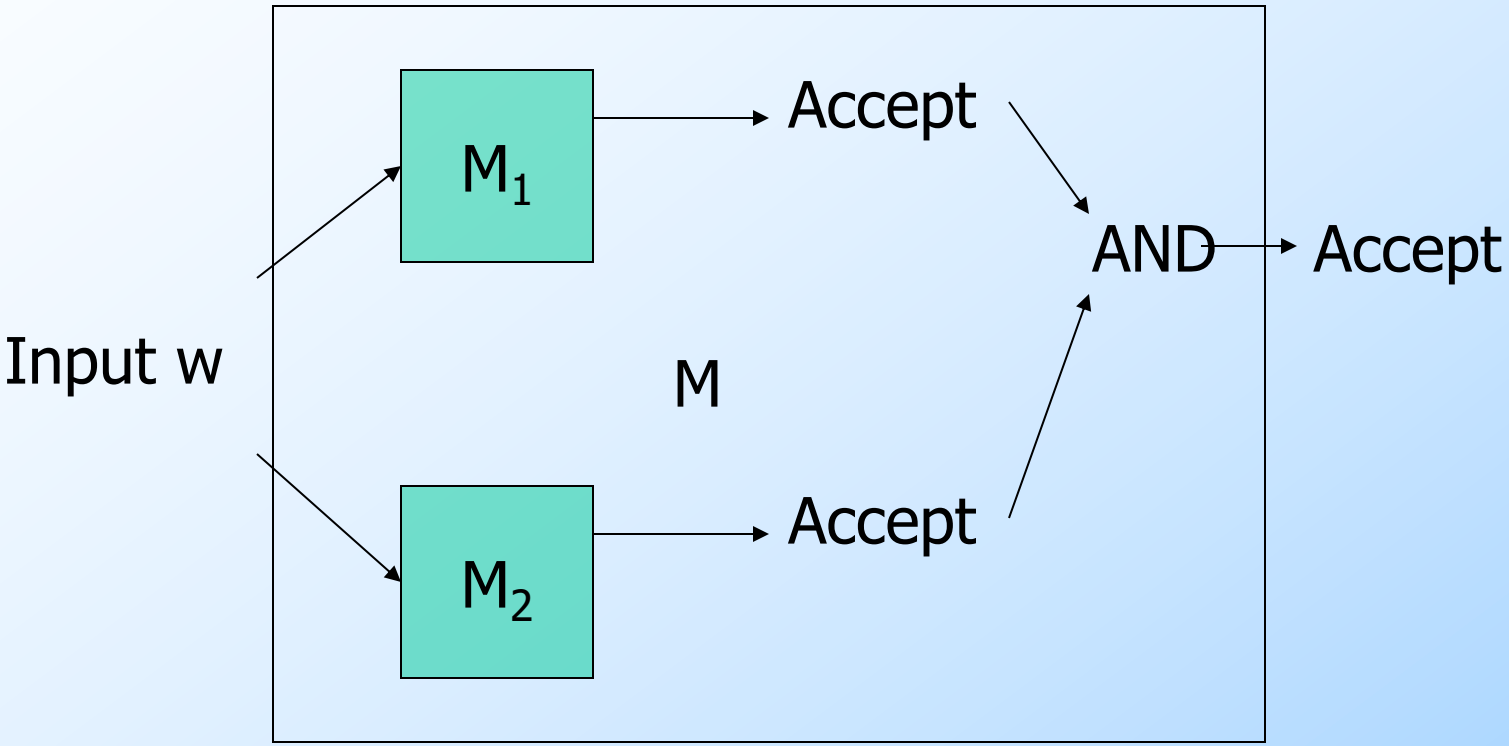

Difference, Complement

- Recursive languages: both TM's will eventually halt.
- Accept if M_1 accepts and M_2 does not.
  - Corollary: Recursive languages are closed under complementation.
- RE Languages: can't do it; M_2 may never halt, so you can't be sure input is in the difference.

Concatenation/RE

- Let $L_1 = L(M_1)$ and $L_2 = L(M_2)$.
- Assume M_1 and M_2 are single-semi-infinite-tape TM's.
- Construct 2-tape Nondeterministic TM M:
  1. Guess a break in input w = xy.
  2. Move y to second tape.
  3. Simulate M_1 on x, M_2 on y.
  4. Accept if both accept.

Concatenation/Recursive

- Let's not use a NTM.
- Systematically try each break w = xy.
- M_1 and M_2 will eventually halt for each break.
- Accept if both accept for any one break.
- Reject if all breaks tried and none lead to acceptance.

Star

- Given $w=x_1x_2x_3\ldots x_n$ and Turing Machine M
- For k=1 to n
  - For each way to write $w=w_1w_2\ldots w_k$
    - If all the w_i are in L(M), accept.
- Else, reject.

Reversal

- Start by reversing the input.
- Then simulate TM for L to accept w if and only w^R is in L.
- Works for either Recursive or RE languages.